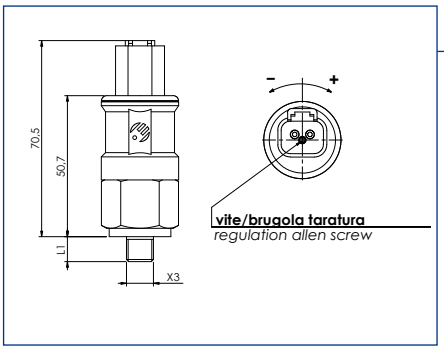

Connettore Deutsch DT04-2P
Connector Deutsch DT04-2P

IP67 / IP69K

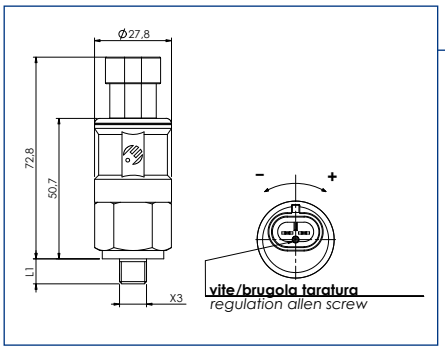

Connettore AMP Superseal 1.5 2 vie
Connector AMP Superseal 1.5 2 way

IP67 / IP69K

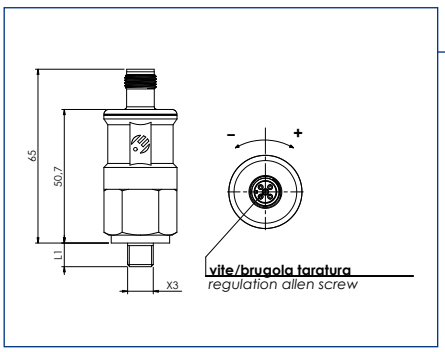

Connettore tipo M12 x 1
Connector type M12 x 1

IP67

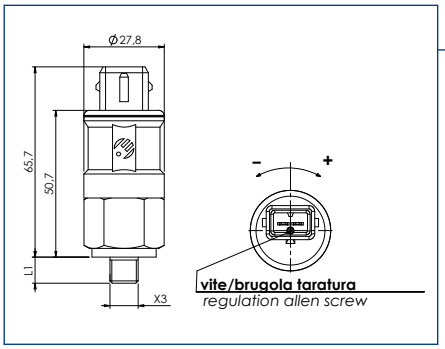

Connettore tipo AMP
Junior power timer
Connector type AMP
Junior power timer

IP65

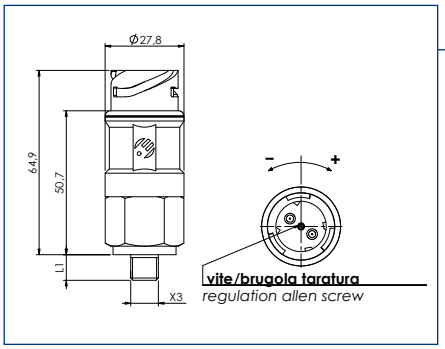

Connettore a baionetta DIN72585
Bajonet connector DIN72585

IP67 / IP69K